G 6300.0V

Built-in dishwasher

Küppersbusch
FÜR KÜCHEN MIT STIL

Features:

- 15 international place settings
- 7 programmes: Intensive programme 70° C, Automatic programme 40° C – 65° C, Economy programme 50° C, Fast programme 35° C, 1h programme 60° C, Machine care programme, Pre-rinse
- Special functions: express system, Half load option, IntensiveClean, IntensiveDry
- LED display
- Electronic time preselection 24h
- Operation via push buttons
- Electronic refill display for salt and rinse aid
- Acoustic signal at end of programme
- multiflex baskets I
- multiflex drawer I
- Height-adjustable top basket also with load
- Interior container Stainless Steel / ground Stainless Steel
- Technically suitable for elevated installation

Technical data:

- Electrical connection	2,1 kW
- Energy consumption per year	270 kWh, per rinse cycle 0,94 kWh
- Water consumption per year	2.660 litres, per rinse cycle 9,5 litres
- Cleaning efficiency:	A
- Drying efficiency:	A
- Appliance dimensions WxHxD	approx. 598 x 818-868 x 550 mm
- Niche dimensions WxHxD	approx. 600 x 820-870 x 590 mm

Country of Origin: Turkey

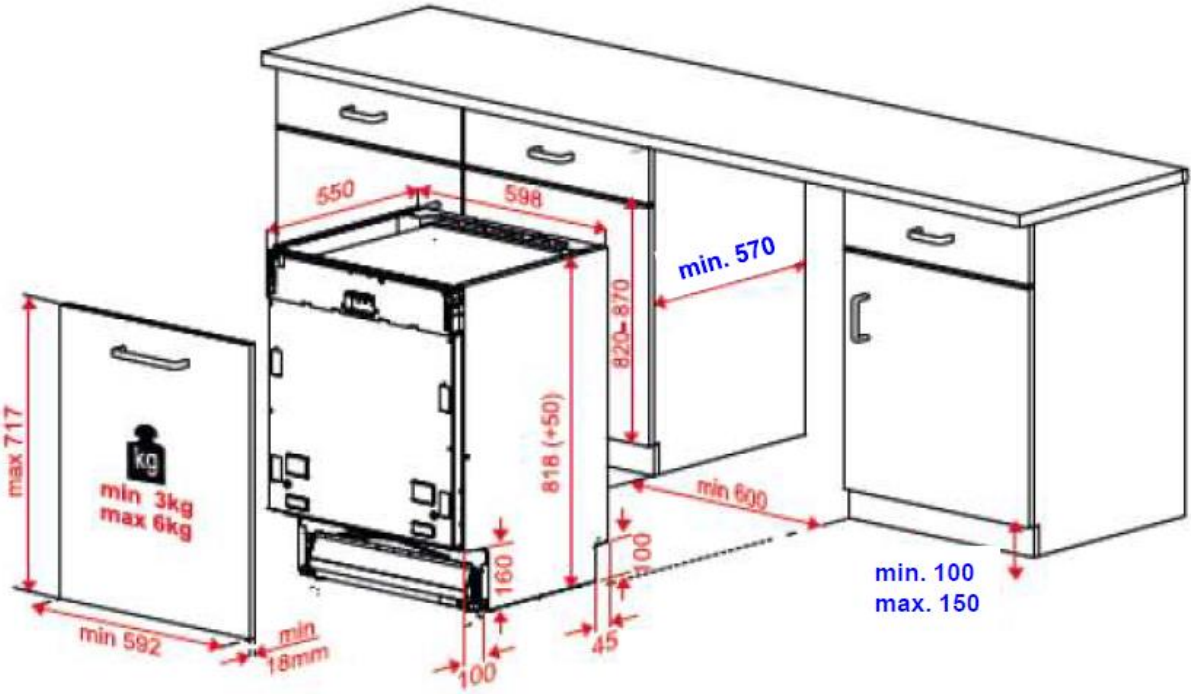

信興電工工程有限公司
SHUN HING GROUP 信興集團 SINCE 1933
Shun Hing Electric Works & Engineering Co., Ltd.