CSW 6800.0G

Built-in Warming Drawer

Küppersbusch
FÜR KÜCHEN MIT STIL

Features CSW 6800.0:

- Ideal complement for a 45 cm high appliance for a 59 cm high built-in niche
- Glass front (see optional accessories) or existing furniture mountable
- Variable power control from approx. 30–80°C
- Capacity (dependent on tableware-size): Dinner service for 6 persons or 20 plates with Ø 28 cm or 80 espresso cups or 40 cappuccino cups
- Telescopic rails

Technical data:

- Electrical connection	0.4 kW
- Appliance dimensions	W x H x D approx. 595 x 140 x 535 mm
- Niche dimensions	W x H x D approx. 560 x 595 x min. 550 mm incl. an appliance of 45 cm height
- Inner dimensions	W x H x D approx. 410 x 105 x 525 mm

Standard accessories:

- Non-slip inlay

Optional accessories: see CSZ 6800.0

Country of Origin: Portugal

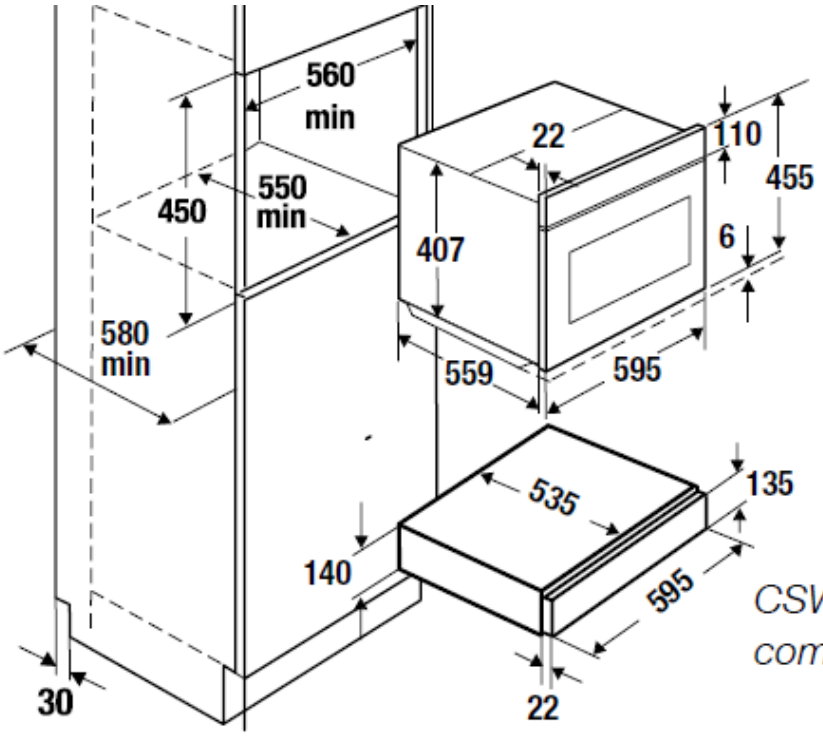

CSW 6800.0 with 45 cm compact appliance